DSP Group Inc. (NASDAQ: DSPG)

at home in your wireless world

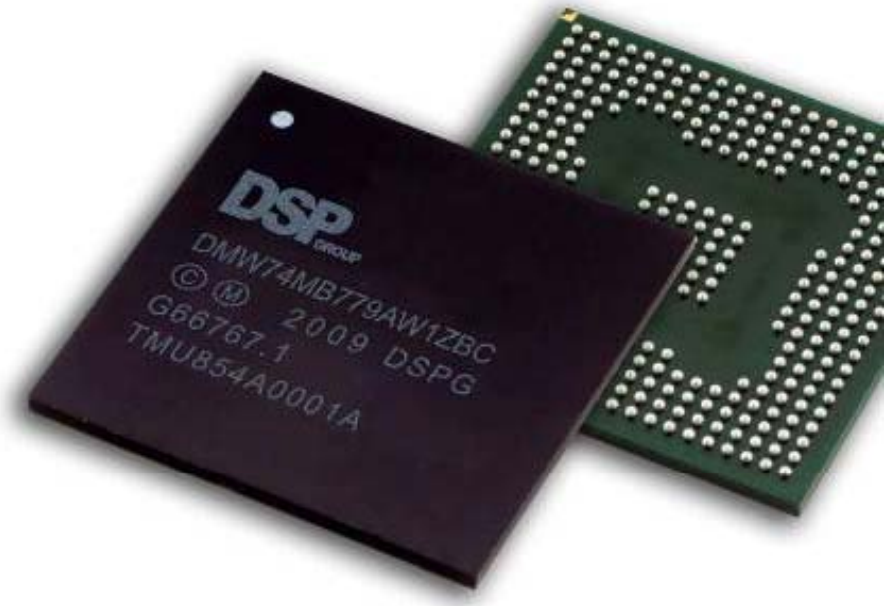

WiFi HS
Software and Hardware Architecture

February 2011

Private and Confidential. Copyright DSP Group, 2010. All rights reserved.

WiFi HS System Architecture

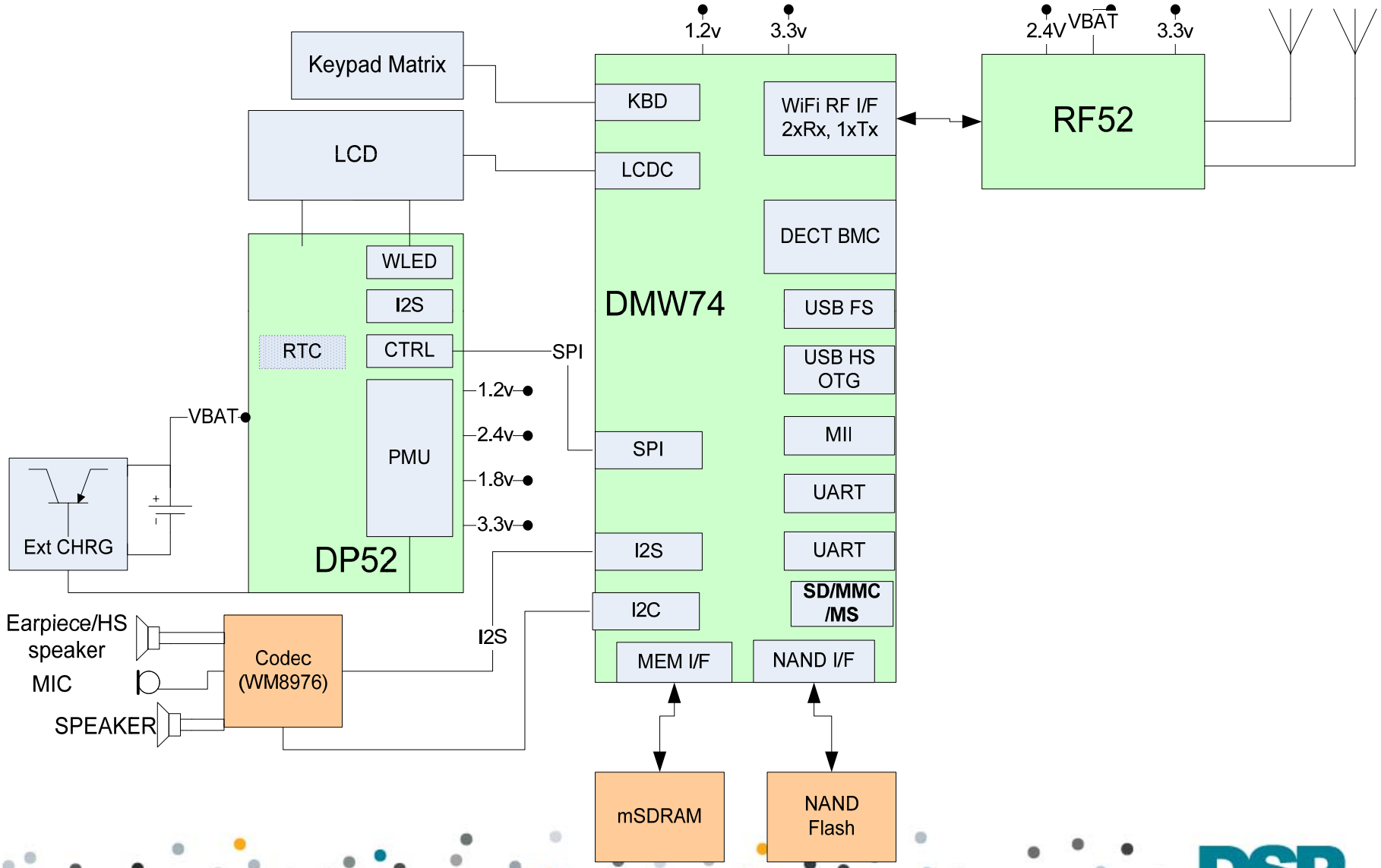

Private and Confidential. Copyright DSP Group, 2008. All rights reserved.

DSP GROUP
at home in your wireless world

WiFi HS Software Architecture

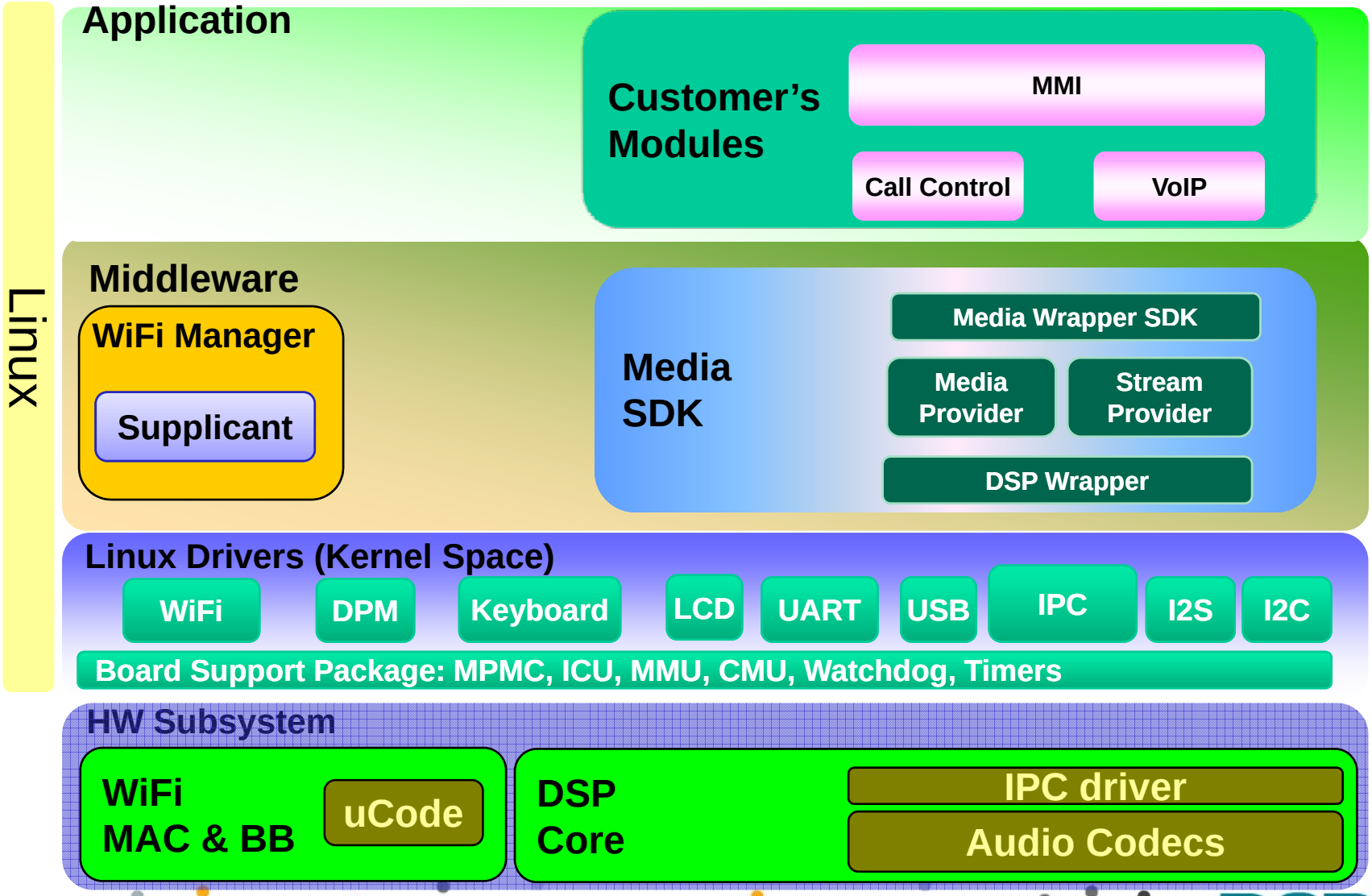

Private and Confidential. Copyright DSP Group, 2008. All rights reserved.

DSP GROUP at home in your wireless world

WiFi HS - Main Software Modules

- Linux Kernel and BSP w/ all drivers listed below
  - WiFi driver for 802.11b/g :
    - WPA1, WPA2, both Personal and Enterprise
    - WPS
    - WMM-PS
  - WiFi, IPC, LCD, Keypad, NAND Flash, Ethernet, USB OTG, UART, TDM (I2S), DP52 support, Wolfson Driver
  - Timers, ICU (Interrupt Controller Unit), MPMC (Memory Controller), MMU (Memory Management Unit), Cache, CMU (Clock Management Unit), WD (Watch Dog)
- WiFi Supplicant
- Voice Codecs
- Media SDK
- Customer's modules: VoIP, Call-control, MMI

Private and Confidential. Copyright DSP Group, 2008. All rights reserved.
DSP GROUP at home in your wireless world

WiFi HS – Kernel Layer Software Modules

- Based on plain vanilla Linux kernel from http://www.kernel.org/
  - Linux kernel: 2.6.29
- BSP with the below drivers
  - Timers
  - ICU (Interrupt Controller Unit)
  - MPMC (Memory Controller)
  - MMU (Memory Management Unit)
  - Cache
  - CMU (Clock Management Unit)
  - WD (Watch Dog)
- Linux drivers
  - WiFi, IPC, LCD, Keypad, NAND Flash, Ethernet, USB OTG, UART, TDM (I2S), DP52 support, Wolfson support

Private and Confidential. Copyright DSP Group, 2008. All rights reserved.
DSP GROUP at home in your wireless world

WiFi HS – WiFi Manager

- Provides simple and comfortable interface to the application layer
- Controls WiFi packages: Protected Setup and Supplicant
- Includes Scanning methods, profiles handling and WiFi power management setup
- Supports
  - WiFi network setup (include security configuration)
    - WEP, WPA and WPS
  - WiFi QoS management (WMM)
  - WiFi power save management (UAPSD, legacy)
  - Handle WiFi notifications (RSSI, disconnect)
  - Statistics management

Private and Confidential. Copyright DSP Group, 2008. All rights reserved.

Media SDK

- Media Wrapper
  - An easy to use C API to interact with media and stream provider. Media Wrapper Test Application is provided for easy devlopment
    - Get a stream
    - Configure a stream
    - Connect streams
    - Start dataflow on a stream
- Stream Provider
  - The streams are audio data flows in DSPG system which the media wrapper interacts with. Examples of streams:
    - Voip Stream: includes RTP – Jitter Buffer - Encoder/Decoder
    - HS Stream: AEC, Analog Front End
    - Tad Stream: A file playback

Private and Confidential. Copyright DSP Group, 2008. All rights reserved.

Media SDK (Cont.)

- Media Provider
  - Voice codecs - G711, G729A, G722
  - Voice algorithms - VAD, CNG, PLC, AEC, AGC, AJB
  - Hands-free (acoustic echo cancellation)
  - Data flows setting
  - DTMF, tone generation
  - Microphone and speaker control
  - Side tone
  - Equalizer

Private and Confidential. Copyright DSP Group, 2008. All rights reserved.

Audio Routing

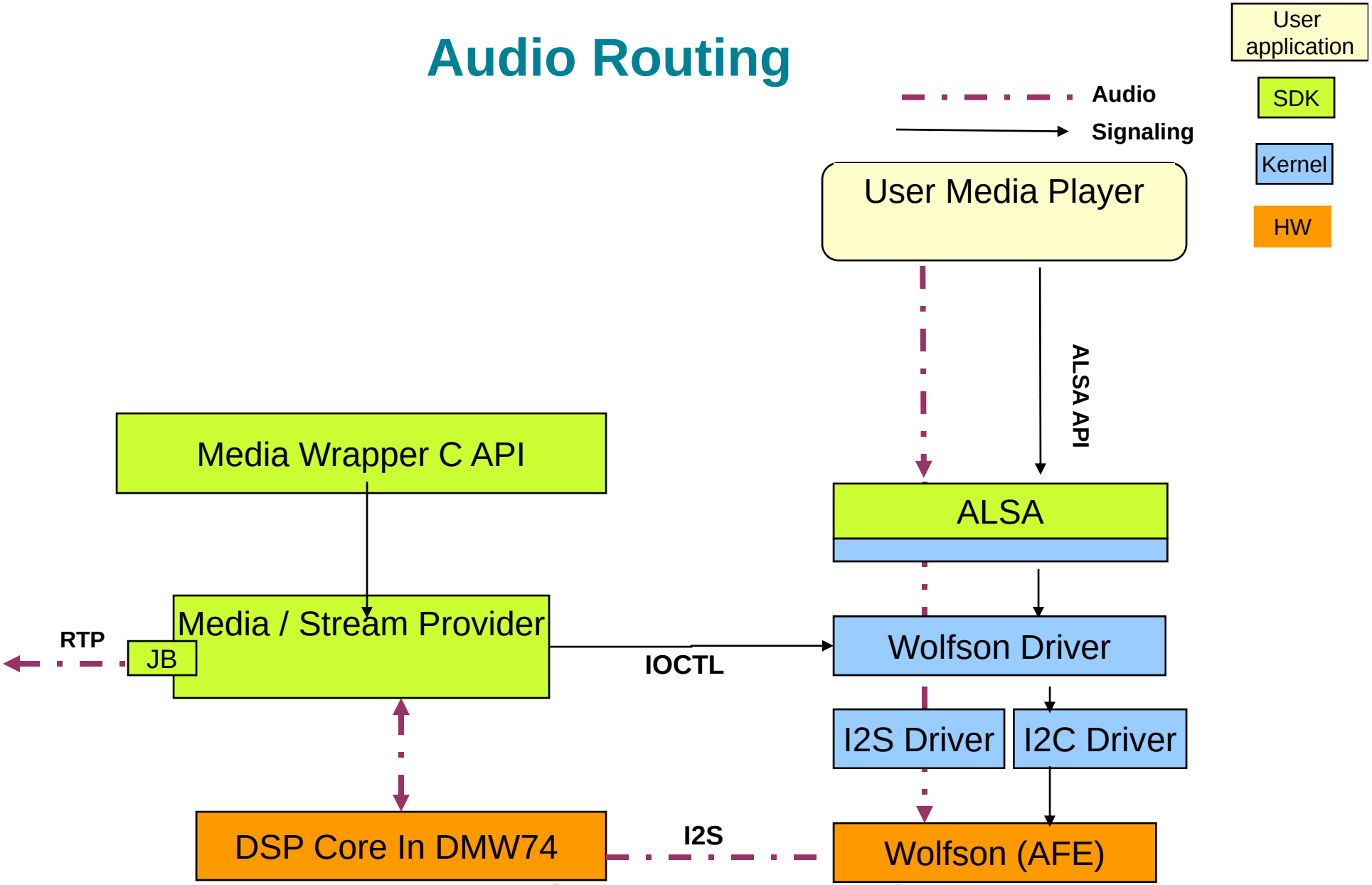

Private and Confidential. Copyright DSP Group, 2008. All rights reserved.

DSP GROUP at home in your wireless world

Audio Routing

- File playback is done via ALSA to the Wolfson driver
- During a call – The media SDK will generate IOCTL in order to grab the Wolfson for the voice call

Private and Confidential. Copyright DSP Group, 2008. All rights reserved.
DSP GROUP
at home in your wireless world

Connecting RTP and HS Streams

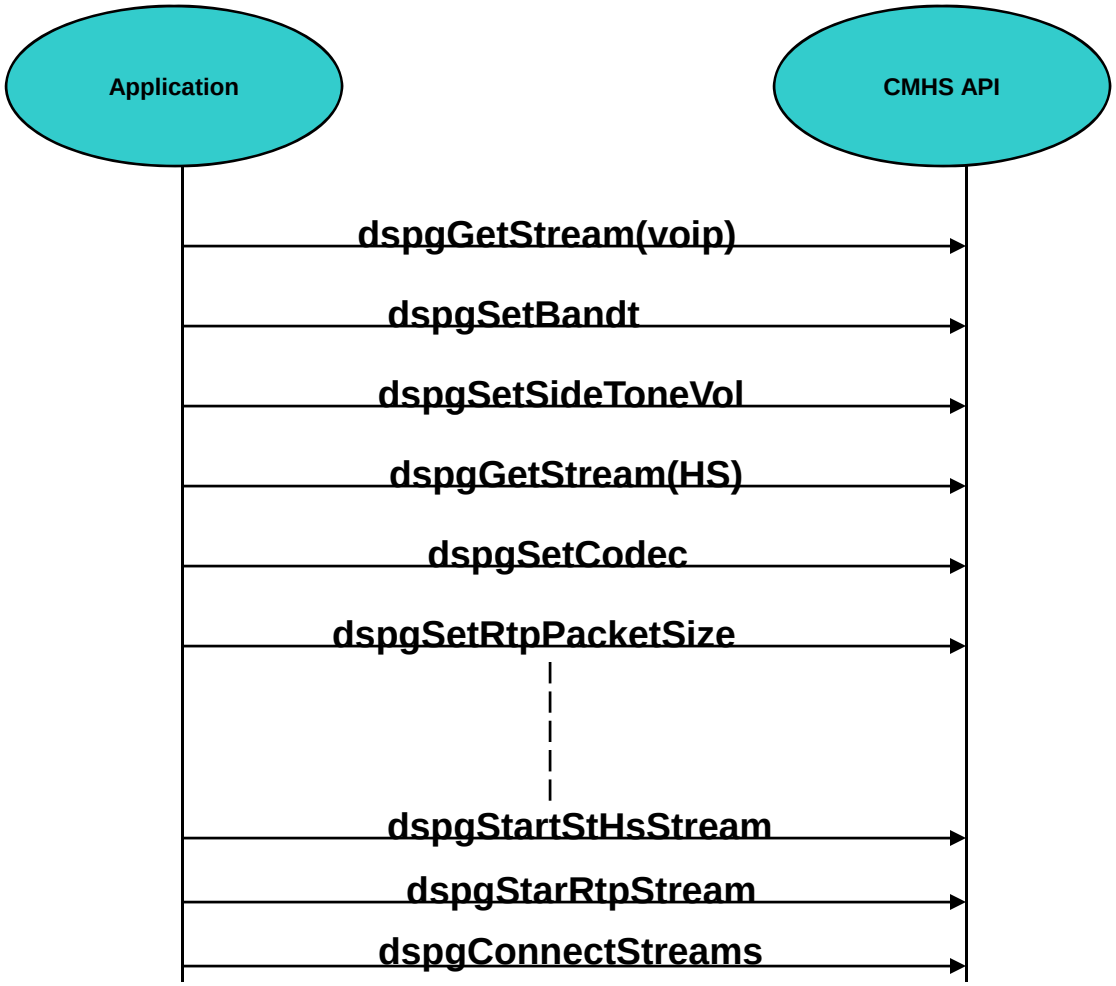

Private and Confidential. Copyright DSP Group, 2008. All rights reserved.

DSP GROUP
at home in your wireless world

Disconnecting RTP and HS Streams

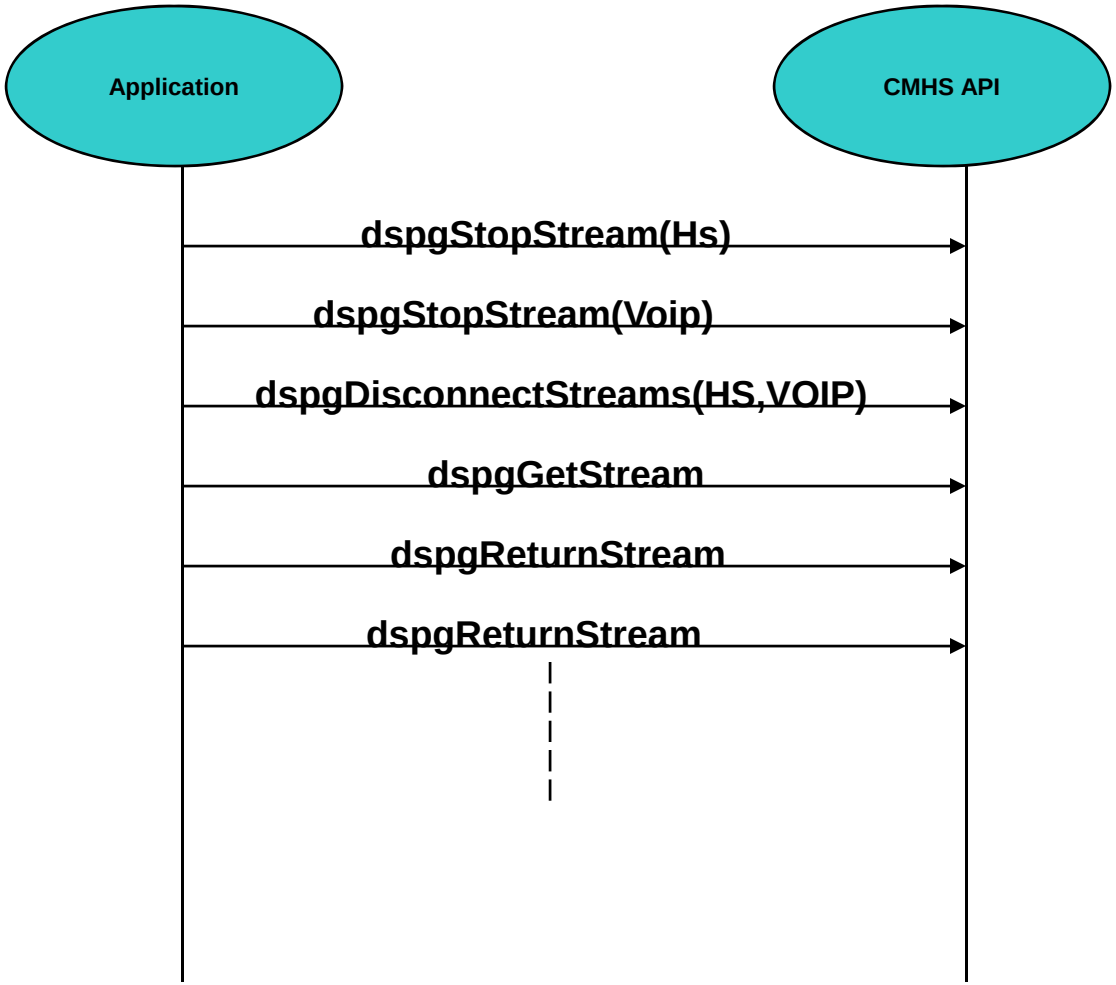

Private and Confidential. Copyright DSP Group, 2008. All rights reserved.

Media Wrapper Test Application – Available TESTS

- rtp_start
  - Get RTP Stream, Configure (ip:port) and connect to the HS Stream
- rtp_stop
  - Stop RTP traffic, close and return RTP Stream
- rtp_hold
  - Stop RTP send
- rtp_resume
  - Resume RTP send
- play_tone
  - Play pre defined tones
- send_dtmf
  - RFC2833
- play_file
  - Play a wav file
- p2p_enable
  - Enable work with JL Host (data flow debug program)
- playTad2RTP
  - Connect TAD stream and RTP stream – play file via RTP

Private and Confidential. Copyright DSP Group, 2008. All rights reserved.
DSP GROUP at home in your wireless world